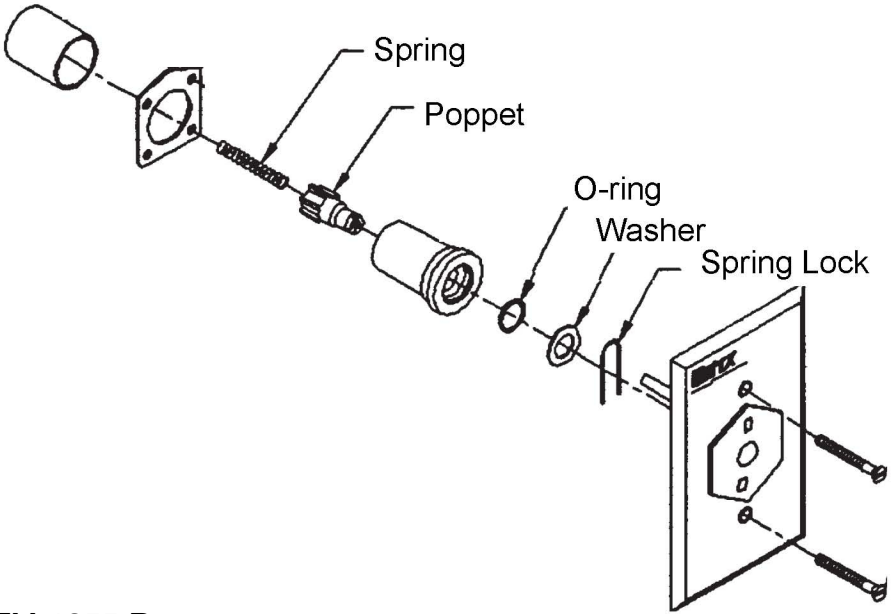

FM-1355 Rev. –